0G22500855

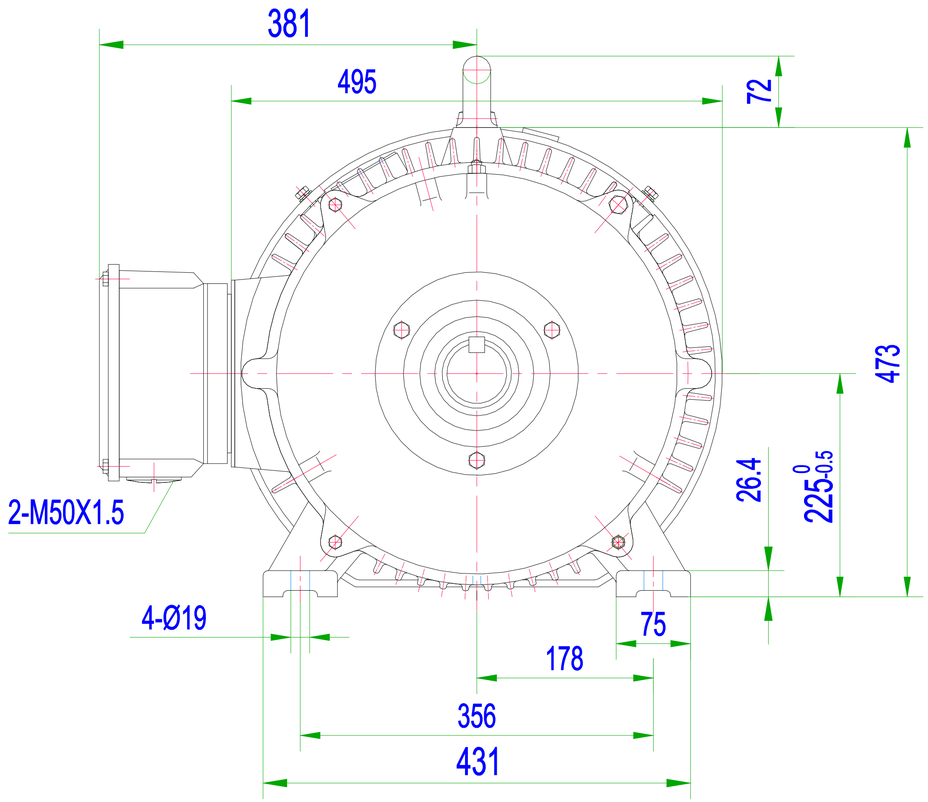

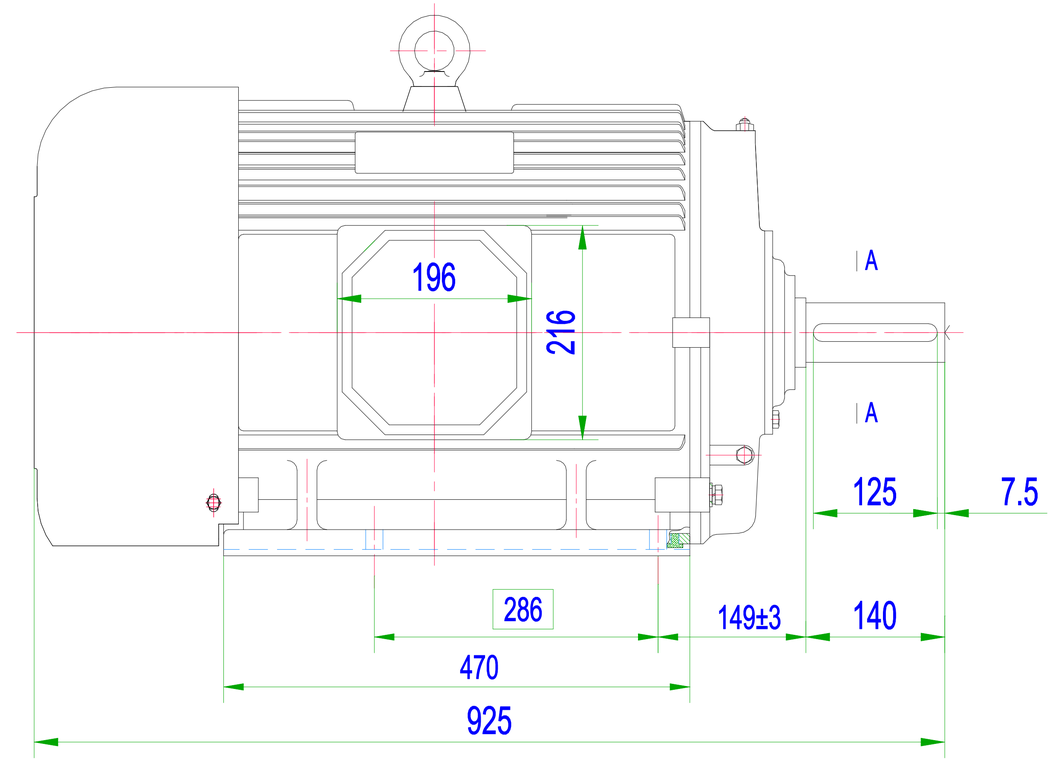

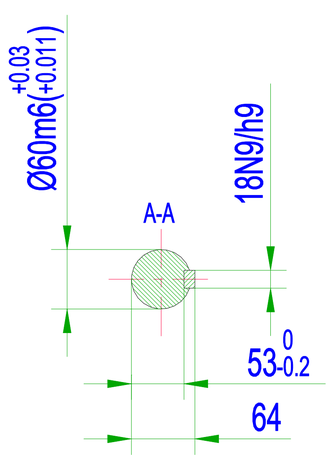

						0G22500855			
						PE3 225S-4			
Mark	No.	Zone	Changed file No.	Signature	Date				
Design			Standard			Sign	Weight	Scale	OUTLINE
Check			Verification					1:8	
Auditing									marathon electric
Technics			Approval			Total page	page No.		